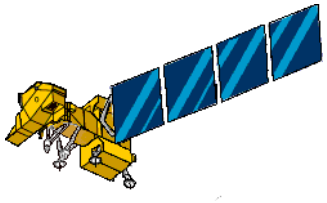

Wideband (Image) Data Format

Ken Allender
USGS/EDC/Raytheon STX
(allender@edcmail.cr.usgs.gov)

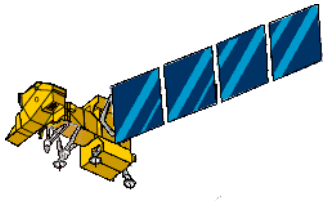

Introduction

- **Landsat 7 Wideband (Image) Data Format**
  - **ETM+ image data, payload correction data, status data characteristics**
  - **Wideband data transmission protocol**

Landsat 7 Ground System

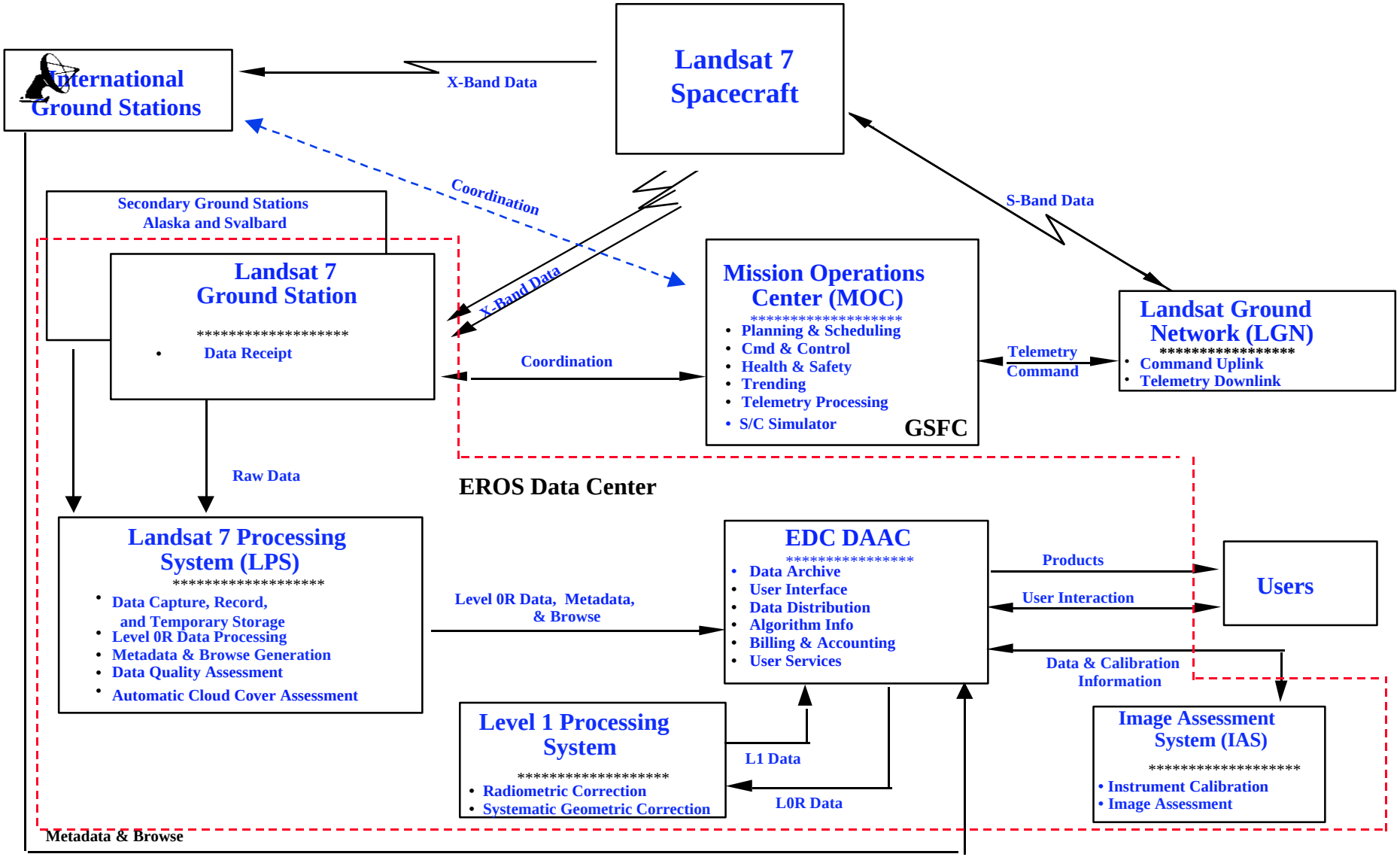

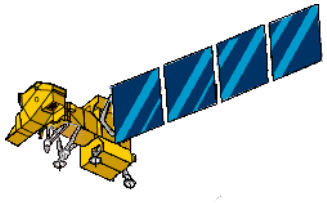

General Description

- **ETM+ image data and payload correction data are packaged and telemetered utilizing the Consultative Committee for Space Data Systems (CCSDS) telemetry recommendations**
- **CCSDS 701.0-B-1, Advanced Orbiting Systems, Networks and Data Links: Architectural Specification**
  - **CCSDS 101.0-B-3, Telemetry Channel Coding**
- **Compliant with CCSDS Grade 3 Bitstream Service**
- **Following are unique to Landsat 7:**
  - **Data pointer inserted to allow user to accurately reconstruct the image data**
  - **BCH Error Detection and Correction (EDAC) to achieve the required Bit Error Rate (BER) of 10^{-6}**

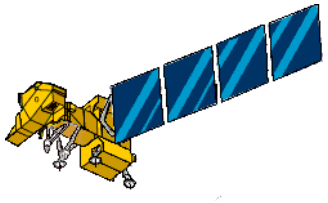

ETM+ Focal Plane Layouts

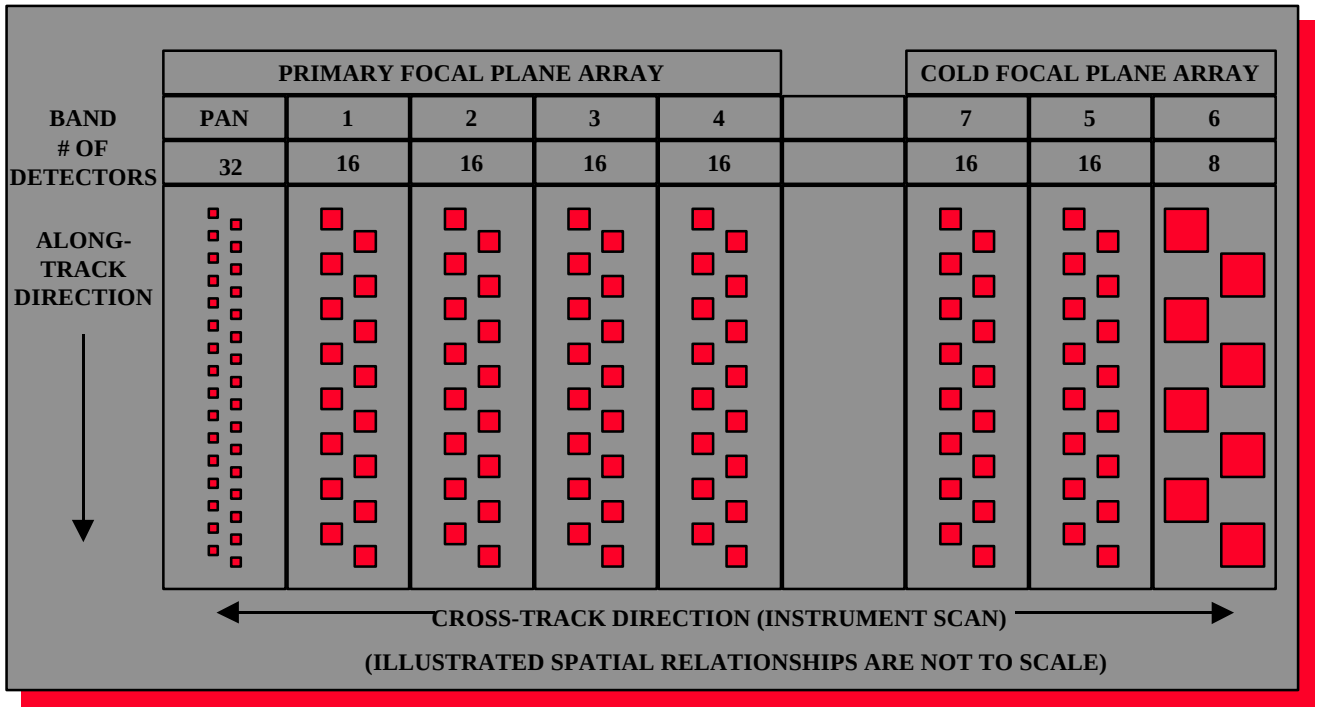

- **Format 1 Data:**
  - **Bands 1, 2, 3, 4, 5, 6**
  - **88 total detectors**

- **Format 2 Data:**
  - **Bands 6, 7, PAN**
  - **56 total detectors**

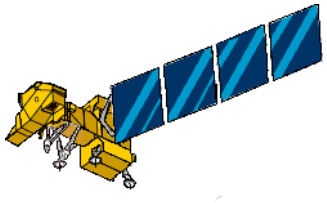

ETM+ Major Frame Structure

- **Data stream composed of a continuous succession of major frames**
- **Each major frame contains data for one complete scan of the ETM+ scan mirror (either direction)**
- **Major frames are partitioned into minor frames**
  - **First minor frame of the major frame is initiated by a mechanically/optically timed pulse from the scan mirror and contains the Line Sync Code**
  - **Next six minor frames contain spacecraft time**
  - **Scene data follows partitioned into minor frames**
  - **Timed pulse from scan mirror indicates end of scene data marked by End-of-Line Code**
  - **Scan Line Length and Scan Direction Codes follow**
  - **Calibration and DC Restore data transmitted during scan mirror turnaround**

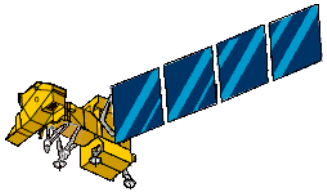

ETM+ Major Frame Structure

Minor Frame Number	Minor Frame Content
0	Line Sync Code
1	Time Code
2	Time Code
3	Time Code
4	Time Code
5	Time Code
6	Time Code
7	Scene Data
8	Scene Data
...	...
...	...
6318	Scene Data
6319	Scene Data
6320	End of Line
6321	End of Line
6322	Scan Line Data
6323	Scan Line Data
6324	Calibration/DC Restore Data
6325	Calibration/DC Restore Data
...	...
...	...
7309	Calibration/DC Restore Data
7310	Calibration/DC Restore Data
7311	Fill Code
7312	Fill Code
...	...
...	...
7422	Fill Code
7423	Fill Code
0	
1	
...	...
...	...

- **7424 minor frames long***
  - **Line Sync Code: 1 minor frame**
  - **Time Code: 6 minor frames**
  - **Scene Date: 6316 minor frames***
  - **End Of Line: 2 minor frames**
  - **Scan Line Data: 2 minor frames**
  - **Cal/DC Restore: 986 minor frames***
  - **Fill Code: 112 minor frames***
- **Each minor frame is 85 (8 bit) words long**
- **Format 1 structure = Format 2 structure**
  - **except scene data minor frame contents differ**

* slight variations are possible

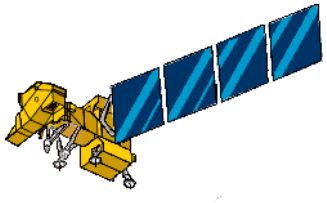

Scene Data Format 1 Minor Frame

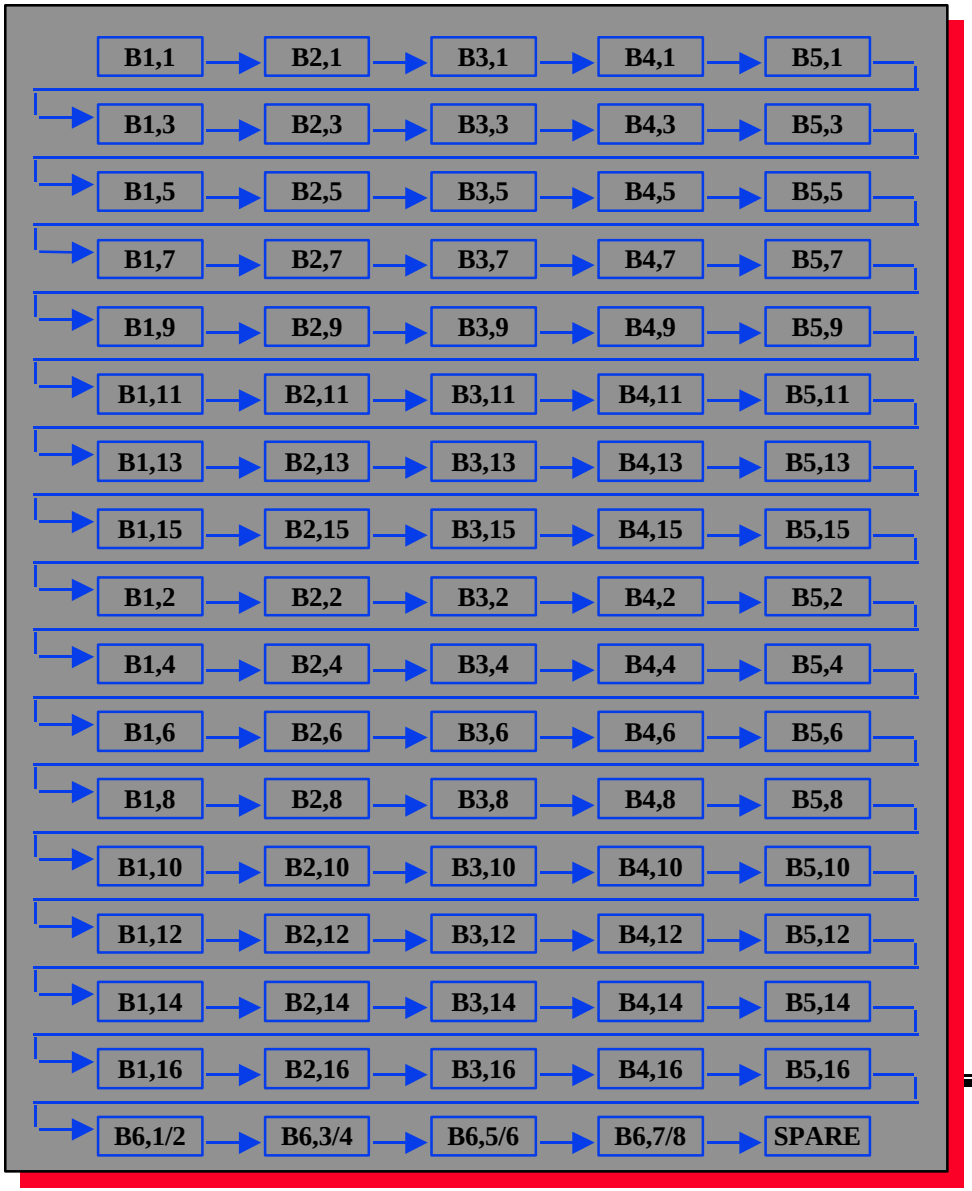

- **Bands 1, 2, 3, 4, 5, 6 image data**
- **1 sample from each of the 80 Band 1 through Band 5 detectors**
- **1 sample from each of the 4 odd/even Band 6 detectors**
- **85 bytes long**
  - **84 bytes of scene data**
  - **1 byte spare (set to “0”)**
- **Left to right, top to bottom transmission order**

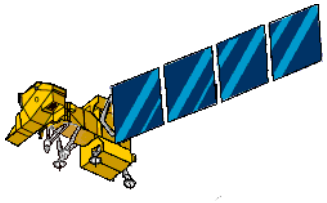

Scene Data Format 2 Minor Frame

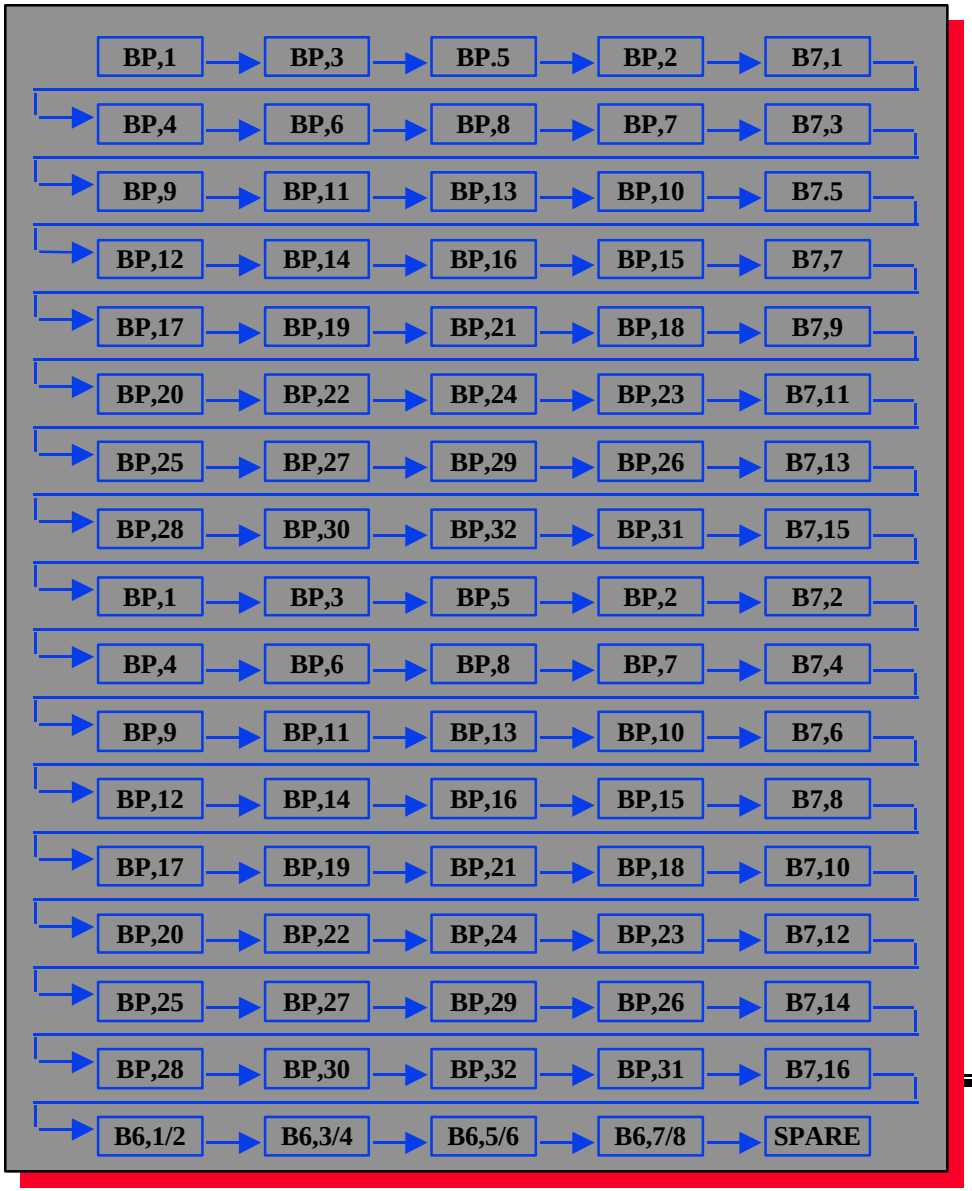

- **Bands 6, 7, PAN image data**
- **1 sample from each of the 16 Band 7 detectors**
- **2 samples from each of the 32 PAN band detectors**
- **1 sample from each of the 4 odd/even Band 6 detectors**
- **85 bytes long**
  - **84 bytes of scene data**
  - **1 byte spare (set to “0”)**
- **Left to right, top to bottom transmission order**

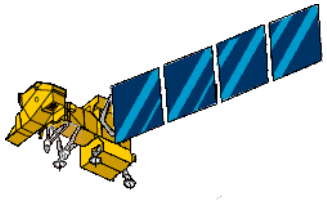

Summary of PCD Contents

- Angular Displacement Sensor Data - high frequency jitter data
- Gyro and Gyro Drift Data- low frequency jitter data
- Attitude Estimate
- Time of Last Space Vehicle (SV) Clock Update
- SV Time Drift Characterization Data
- Ephemeris
- ETM+ Telemetry Data
- Spacecraft ID and Time Code
- Multiplexer Status
- PDF A/D Ground Reference
- PCD Minor Frame Sync
- PCD Major Frame Identification
- Attitude Control System Mode
- ETM+ On/Off Times
- Gyro Select data
- ETM+ Bands On Flags

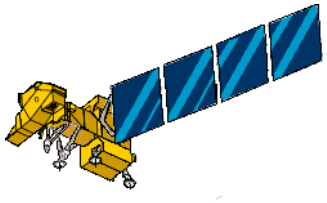

Packed PCD Format

- **1 PCD cycle is required to produce a full set of PCD**
  - **1 PCD cycle = 4 PCD major frames**
  - **1 PCD major frame = 128 PCD minor frames**
  - **1 PCD minor frame = 128 PCD words**
  - **1 PCD word = 1 byte = 8 bits**
- **1 PCD cycle generated in 16.384 seconds**
  - **1 PCD cycle requires 65536 PCD words**
  - **PCD words are generated at 4 kilobytes/second**
- **PCD words generated asynchronously with respect to the ETM+**
- **PCD words are placed in the serial unpacked PCD format for transmission (see next slide)**
- **Packed PCD format (cycles, major frames, minor frames) is reconstructed on the ground during Level 0R processing**

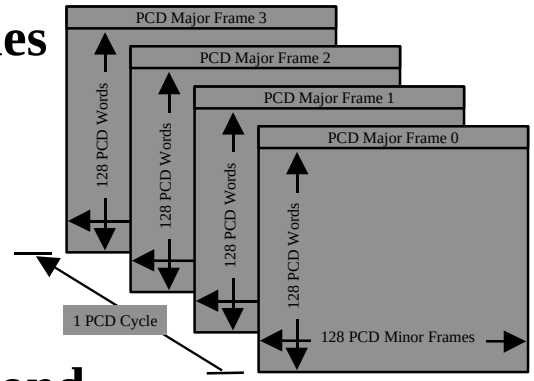

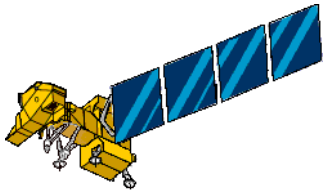

Unpacked PCD Format

- **Generated asynchronously with the ETM+ at 4 kilobytes/sec**
- **Consists of three types of eight bit words**
  - **Sync, Data, Fill**
- **Data word is packed PCD Major Frame x, Minor Frame y, Word #z**
- **The same data word is repeated three times**

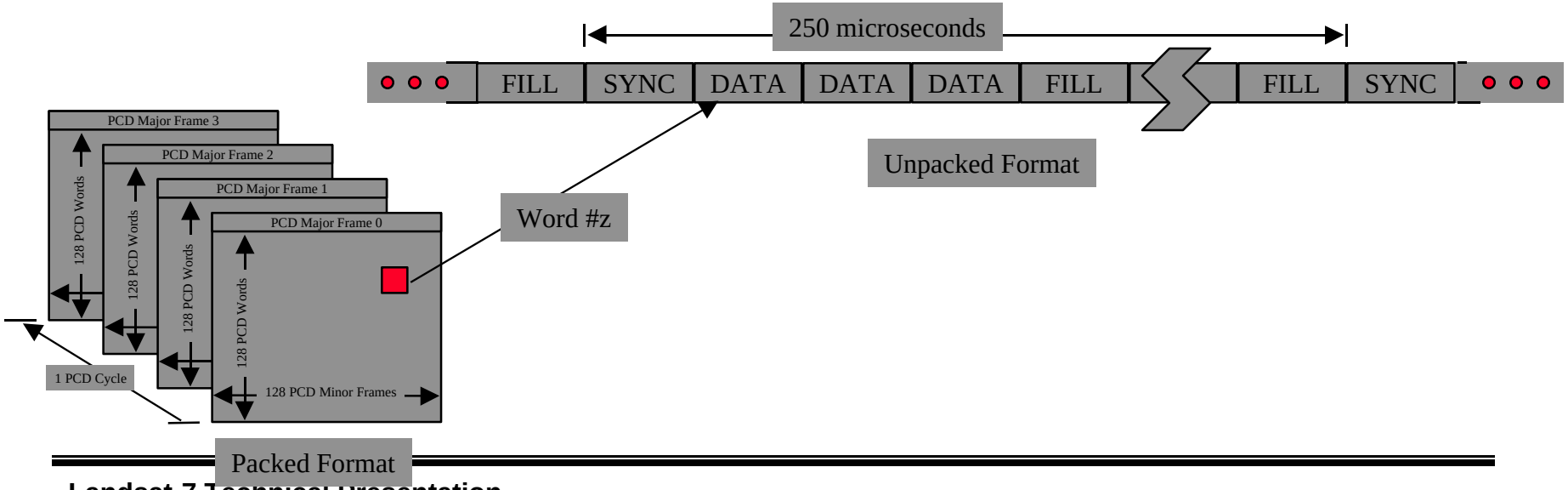

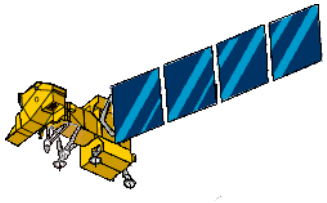

Status Data

- **Reflects operational status of L7 subsystems during the transmission of ETM+ image data and consists of the following:**
  - **ETM+ minor frame counter, scan direction**
  - **System Status**
    - **mux assembly ID, Format 1/Format 2, CAL Shutter/Backup Shutter**
  - **Band Gain States**

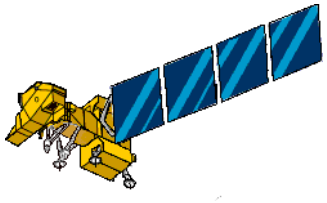

CCSDS Landsat 7 Protocol

- **ETM+ image data (major frames) and PCD/Status data is formatted and telemetered using a CCSDS Grade 3 Bitstream service**
- **Benefits include:**
  - **Improved bit error rate performance (10^{-6}) due to included error detection and correction information**
  - **Link quality metrics are inherent to the data (error detection can be performed at multiple levels)**

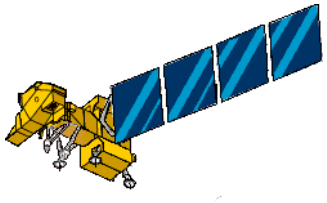

CCSDS L7 Protocol Layers

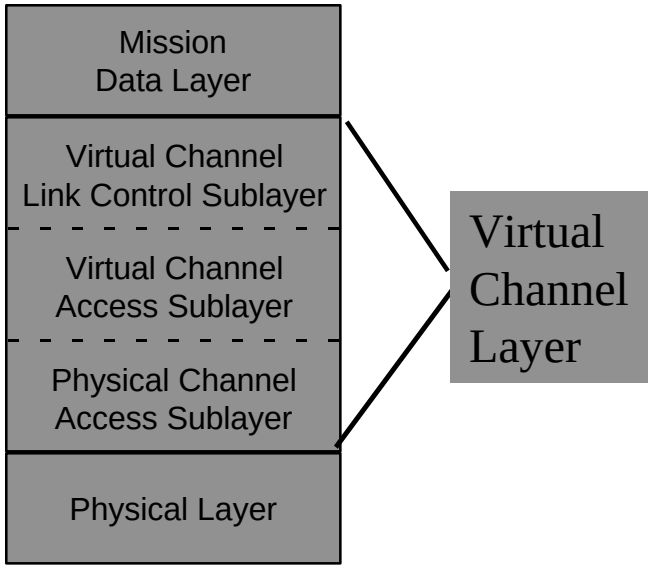

- **Mission Data Layer**
  - **Mission Data (Image data, Payload Correction Data & Status)**
- **Virtual Channel Layer**
  - **provides bitstream segmentation with error detection and correction**
  - **provides headers and trailers for end-to-end flow control**
  - **provides synchronization for transfer across the physical channel**
- **Physical Layer**
  - **QPSK modulated X-Band radio channel**

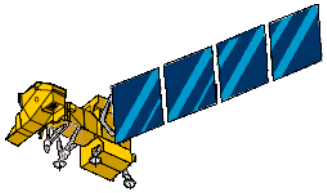

L7 Protocol Layers

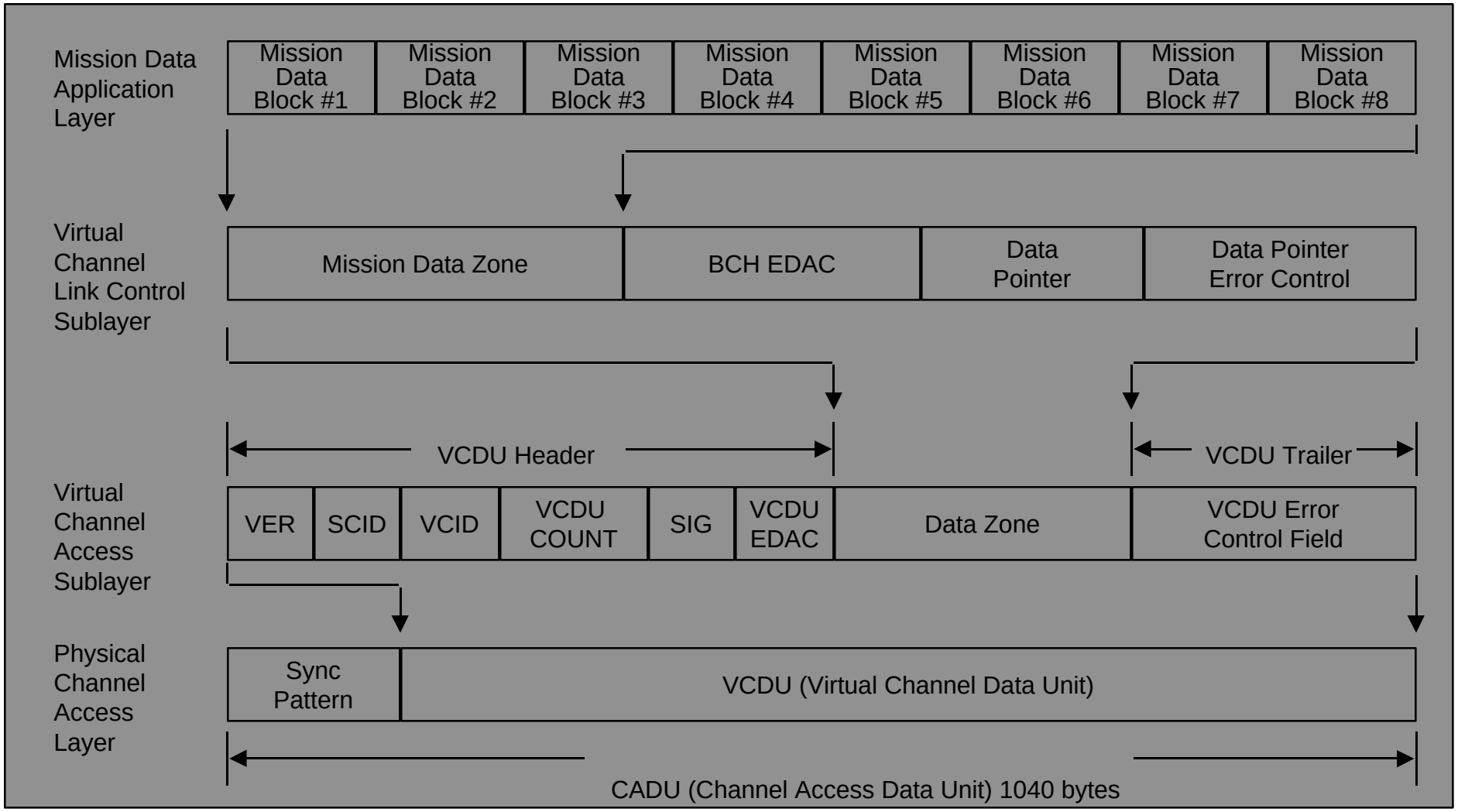

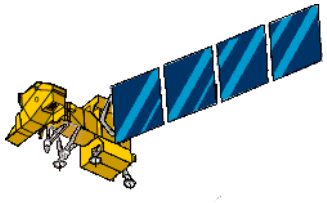

Mission Data Layer

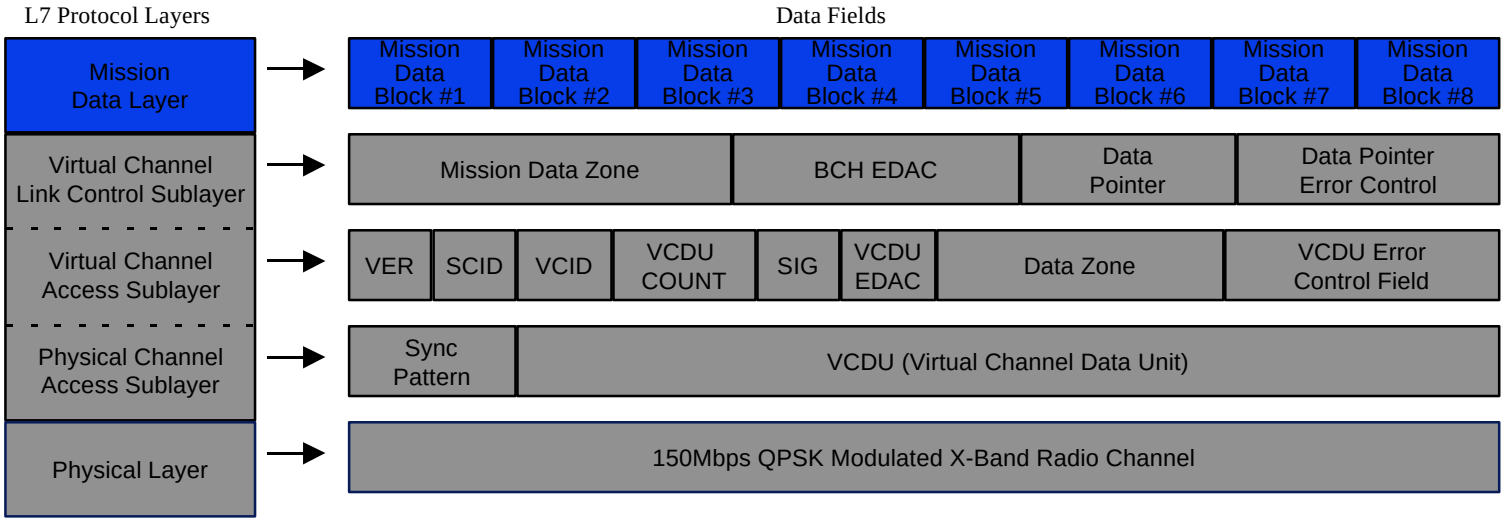

- **This layer consists of the ETM+ major frame data stream and the unpacked PCD/Status data stream (see previous charts)**

Virtual Channel Link Control Sublayer

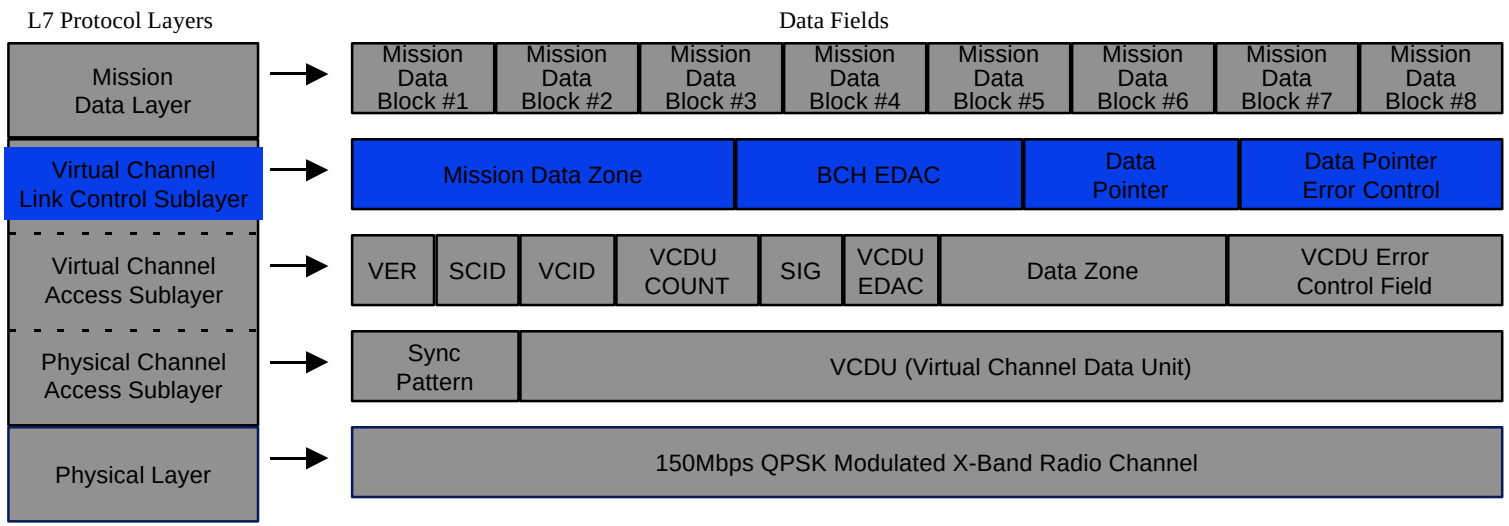

- **Performs bitstream segmentation**
- **Adds error detection and correction coding**

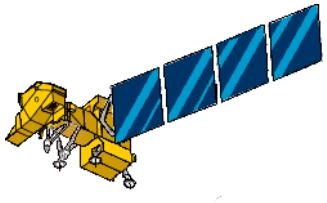

Virtual Channel Link Control Sublayer PCD/Status Data

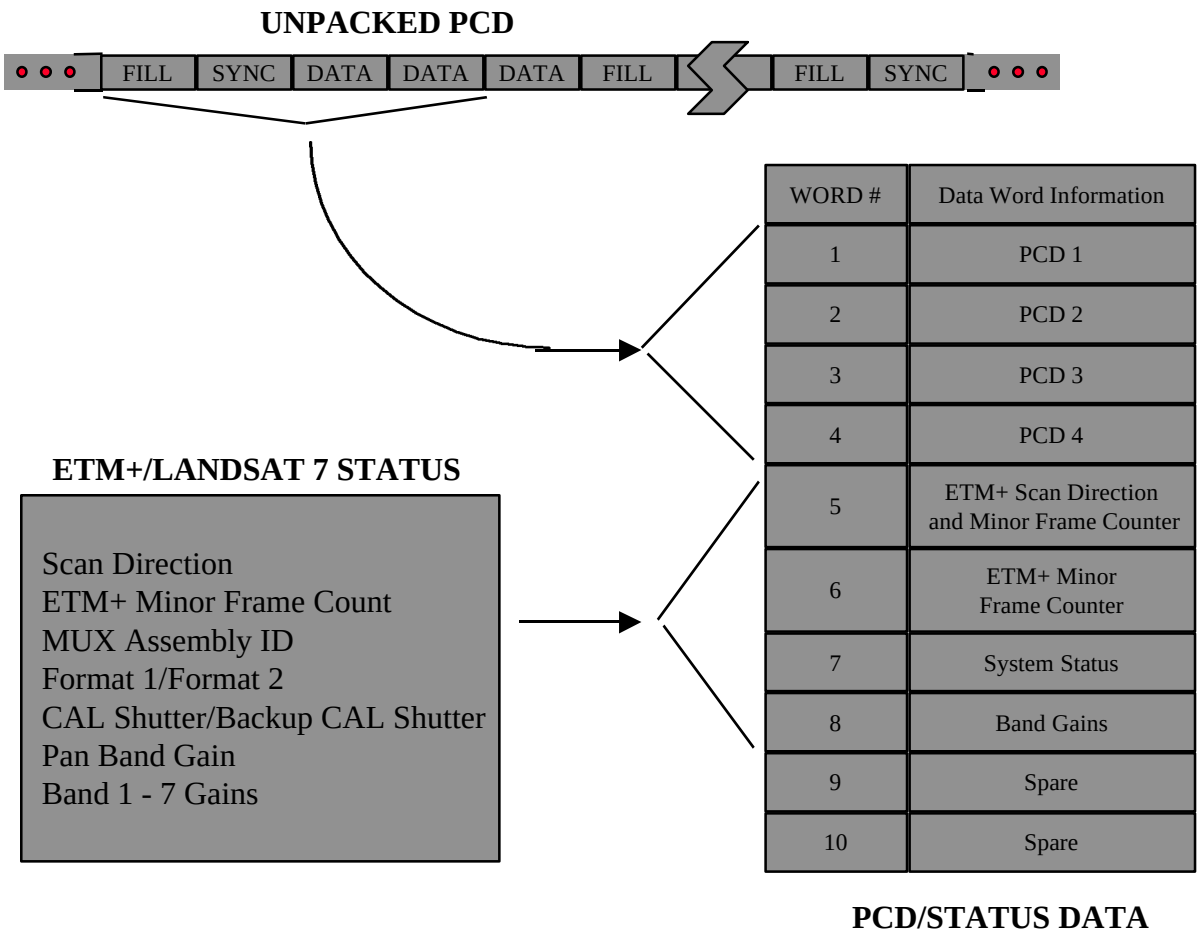

- **Mission Data Zone in VCDU Data Zone contains 10 bytes of PCD/Status**
  - **4 bytes unpacked PCD words**
  - **2 bytes Minor Frame Count**
  - **1 byte system status**
  - **1 byte gains for all bands**
  - **2 spare bytes**

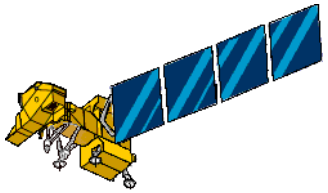

Virtual Channel Link Control Sublayer Bitstream Segmentation

Minor Frame Number	Minor Frame Content
0	Line Sync Code
1	Time Code
2	Time Code
3	Time Code
4	Time Code
5	Time Code
6	Time Code
7	Scene Data
8	Scene Data
...	...
...	...
6318	Scene Data
6319	Scene Data
6320	End of Line
6321	End of Line
6322	Scan Line Data
6323	Scan Line Data
6324	Calibration/DC Restore Data
6325	Calibration/DC Restore Data
...	...
...	...
7309	Calibration/DC Restore Data
7310	Calibration/DC Restore Data
7311	Fill Code
7312	Fill Code
...	...
...	...
7422	Fill Code
7423	Fill Code
0	
1	
...	...
...	...

ETM+ MAJOR FRAME

MISSION DATA ZONE

Mission Data Block #1	982 bits
Mission Data Block #2	982 bits
Mission Data Block #3	982 bits
Mission Data Block #4	982 bits
Mission Data Block #5	982 bits
Mission Data Block #6	982 bits
Mission Data Block #7	982 bits
Mission Data Block #8	982 bits
PCD/Status	80 bits

Virtual Channel Link Control Sublayer

WORD #	Data Word Information
1	PCD 1
2	PCD 2
3	PCD 3
4	PCD 4
5	ETM+ Scan Direction and Minor Frame Counter
6	ETM+ Minor Frame Counter
7	System Status
8	Band Gains
9	Spare
10	Spare

PCD/STATUS DATA

- **Continuous stream of ETM+ major frames are segmented into mission data blocks of length 982 bits**
- **8 consecutive mission data blocks plus 10 bytes of PCD/ETM+ status are combined into a mission data zone unit for inclusion in the virtual channel link control sublayer**

Virtual Channel Link Control Sublayer

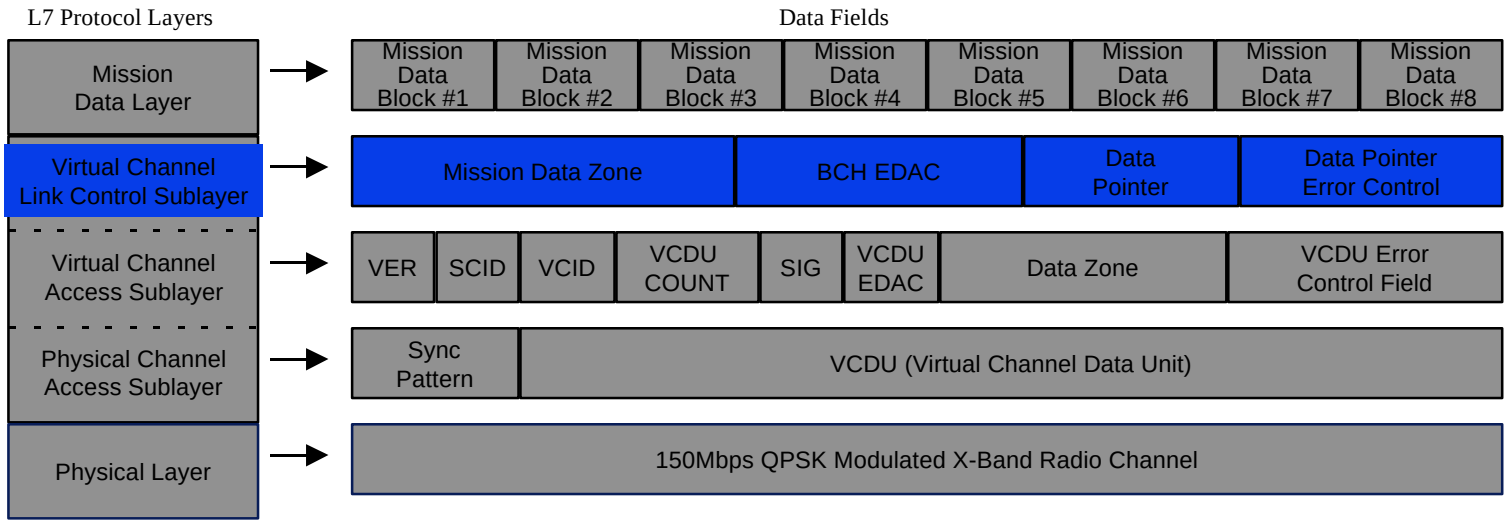

- **Mission Data Zone (MDZ) -- Contains ETM+ image data (per minor and major frame format), PCD, and ETM+ status**
- **BCH EDAC -- Capability to correct three errors in 993 bits with 30 code bits. Performed on 8 blocks of 992 bits with one fill bit per block**
- **Data Pointer -- Indicates number of words between beginning of MDZ and first full ETM+ minor frame in the MDZ**
- **Data Pointer Error Control -- BCH code, corrects 3 errors in 16 bits with 15 code bits**

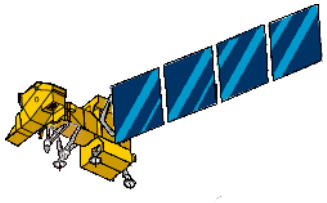

Virtual Channel Access Sublayer

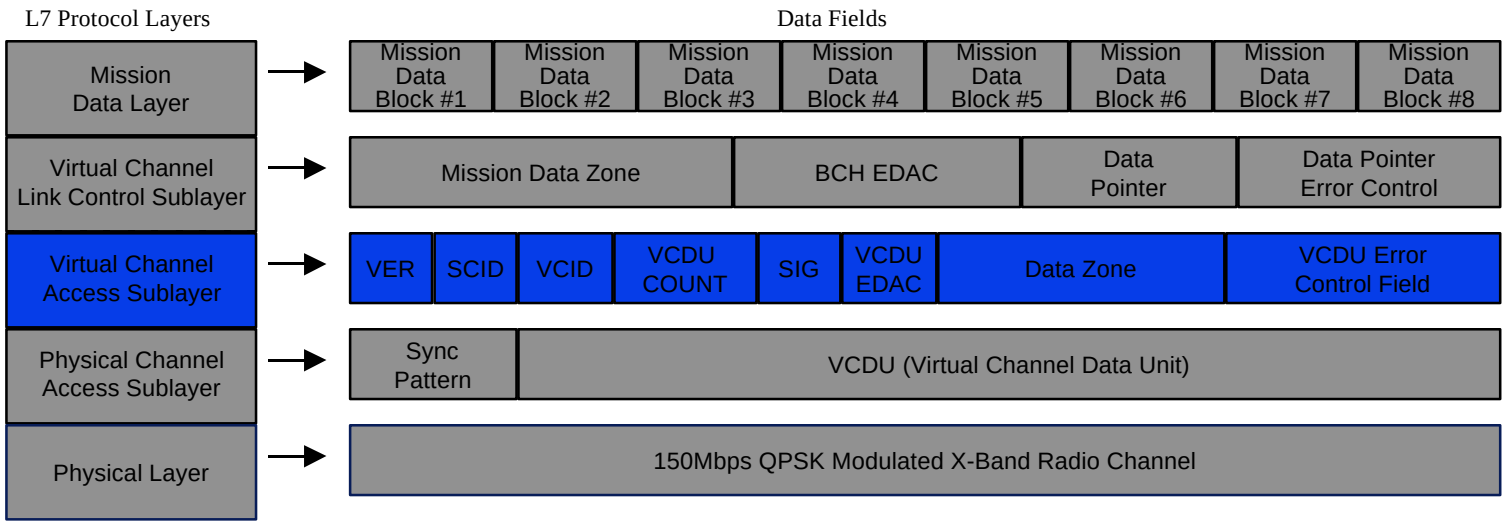

- **Provides headers and trailers for end-to-end flow control**
  - **Version Number (VER) - Indicates Version-2 CCSDS packet**
  - **Spacecraft Identifier (SCID) - unique number assigned to L7**
  - **Virtual Channel Identifier (VCID) - identifies data as ETM+ Format 1 or Format 2**
  - **Virtual Channel Data Unit Counter (VCDU Count) - contains number of VCDU's for current interval**

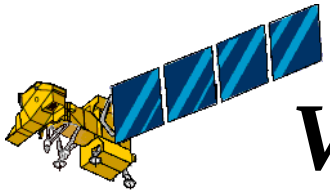

Virtual Channel Access Sublayer (continued)

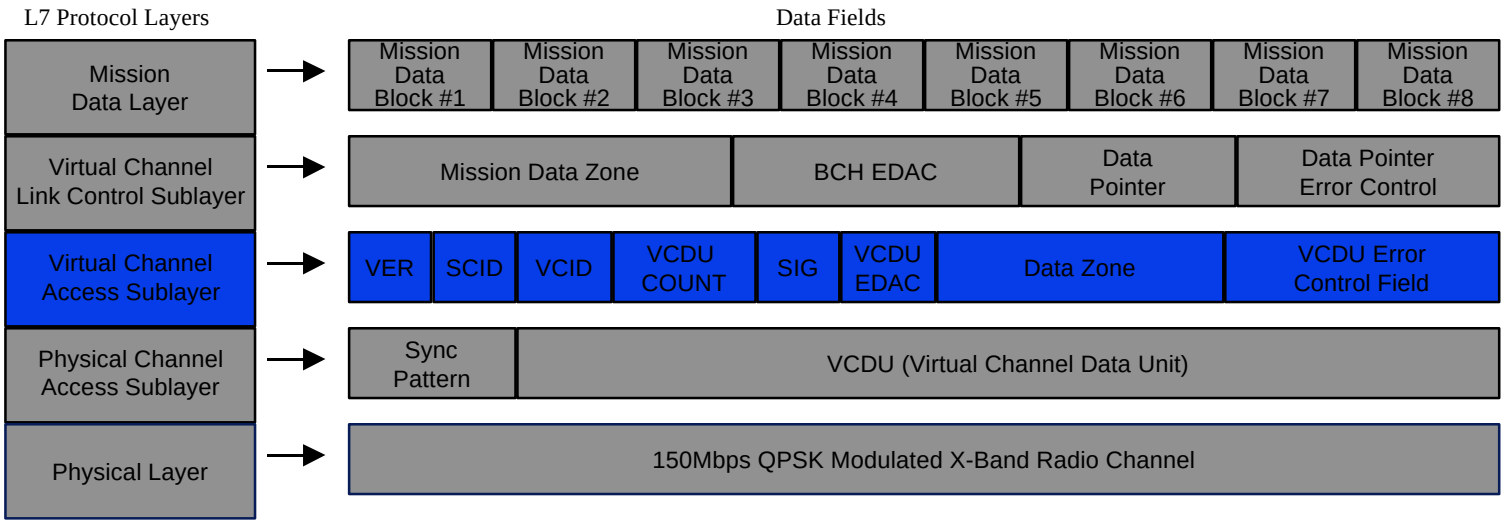

- **Provides headers and trailers for end-to-end flow control (continued)**
  - **VCDU EDAC - Reed-Solomon code, provides EDAC for the VCDU header (except for the VCDU COUNT field)**
  - **VCDU Trailer - 16 bit Cyclic Redundancy Code (CRC), provides error detection capability for entire VCDU**

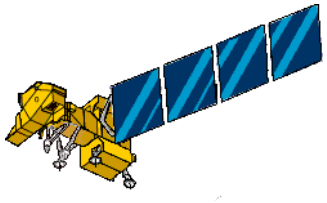

Physical Channel Access Sublayer

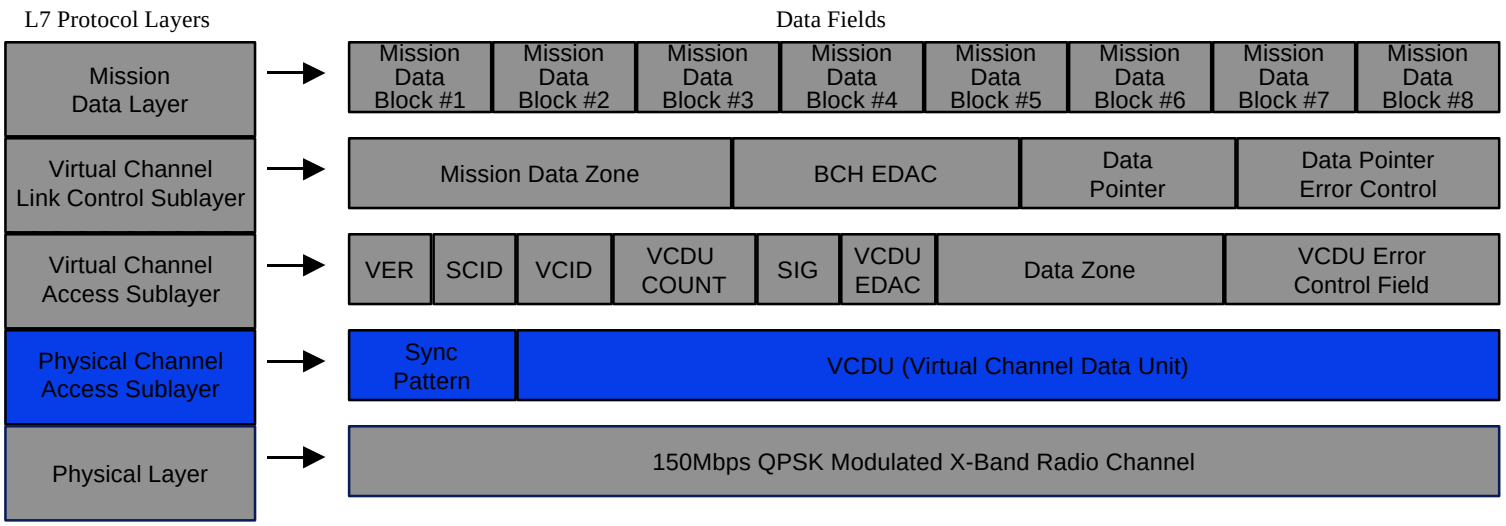

- **Pseudo-Randomizer**
  - **Used to guarantee the necessary bit transition density to maintain bit synchronization**
  - **Exclusive-OR of each bit in VCDU with a standard pseudo-random sequence**
- **Synchronization Marker**
  - **32 bit field located at beginning of each Channel Access Data Unit**

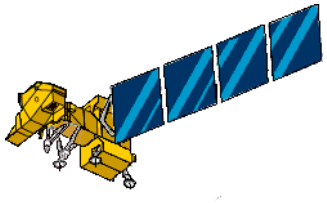

Physical Layer

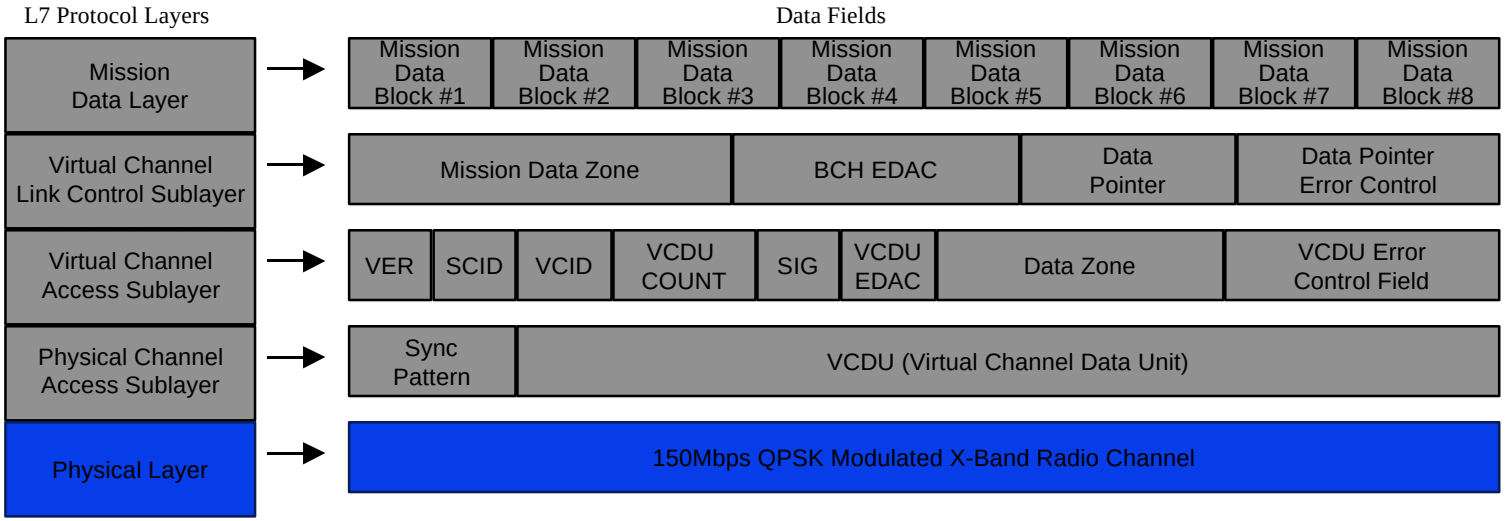

- **Provides medium for transmission of the Channel Access Data Units (CADUs) from the vehicle to the ground**
- **QPSK modulated X-band radio channel**
  - **X-band frequencies: 8082.5 MHz, 8212.5 MHz, 8342.5 MHz**
  - **Balanced QPSK, 150 Mbps data rate**
- **One X-band radio channel channel supports 2 virtual channels**
  - **Virtual channel 1 is Format 1 Data**
  - **Virtual channel 2 is Format 2 Data**

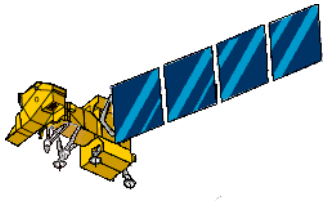

Summary

- **Wideband data format conforms to CCSDS Recommendations**
- **ETM+ scene data for all bands contained in two independent, CCSDS formatted data streams**
  - **Format 1 contains bands 1 through 6**
  - **Format 2 contains bands 6, 7, and PAN**
- **BCH EDAC used to achieve specified BER**
- **Data Pointer added to reconstruct minor frame structure**
- **Physical link is QPSK modulated X-Band radio channel**